GRADE 10 MATHEMATICAL LITERACY

Name: key: Prepared by A Yankey for FHS

Concepts

07/09 – 11/09 **Revised** **ATP date**	**21. Models :** • Investigate packaging arrangements using actual cans and a range of actual boxes • Determine the most appropriate way to package cans and/or boxes for optimal use of space. • **Make and use**: ✓ 3-dimensional scale models of packaging containers ✓ 2-dimensional scale cut-outs/pictures of appropriate views of 3-dimensional models of packaging containers. **In order to**: • Investigate the best packaging shape to use for packaging a particular product • Investigate the best packaging shape to use for fragile and irregular-shaped objects • Investigate the amount of material used to make a box. • Investigate the number of furniture items that can fit into a venue, while considering the space needed for tables, chairs and walking around. • Estimate quantities of materials needed using perimeter, area and volume calculations	e.g. packaging containers for balls, biscuits, etc. e.g. Should balls be packaged in a cylindrical or rectangular container? e.g. paint; tiles

- Use instructions to assembly diagrams

MODELS

Note: When doing calculation involving packaging:

1. Values are rounded down.
2. To determine the quantity of items that can fit in a box:
   First determine how many of the items can fit along the box, across the box and how many can be place on top of each other, then find the product of the answers.
3. Example: if 6 baked beans can fit along a box (along the length), 5 can fit across (along the breadth) , and 2 can be stacked on top (along the height). Then in total the box can fit $6 \times 5 \times 2 = 60$ baked beans.
4. Take into account the tolerance space (space to be left in between items) if given. In this the items might not be tightly packed.

QUESTION 1

A company that manufactures tuna, uses a box to package the tuna cans for delivery as shown below. The diameter of the tuna is 7,4 cm and height is 3,7cm. The box has the following dimensions: Length=31cm, breadth=25cm and height = 12,5cm. The cans are tightly packed

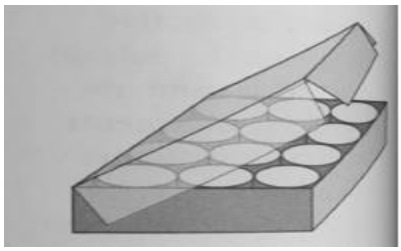

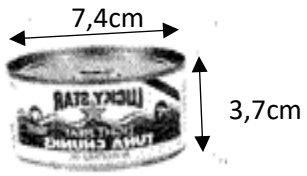

1.1 How many tunas can be packed along the length of the box?

_____

1.2 How many tunas can be packed along the breadth(across) the box?

_____

1.3 How many tunas can be stacked on top of each other?

1.4 _____

1.5 Hence determine how many tunas will fit in the box.

_____

1.6 What is the volume of the packaging box?

_____

QUESTION 2

The containers labelled Figure 6, 7 and 8 are used to packed tissue papers, shown in figure 9

(length =20cm, breadth = 20cm and height = 6.5cm)

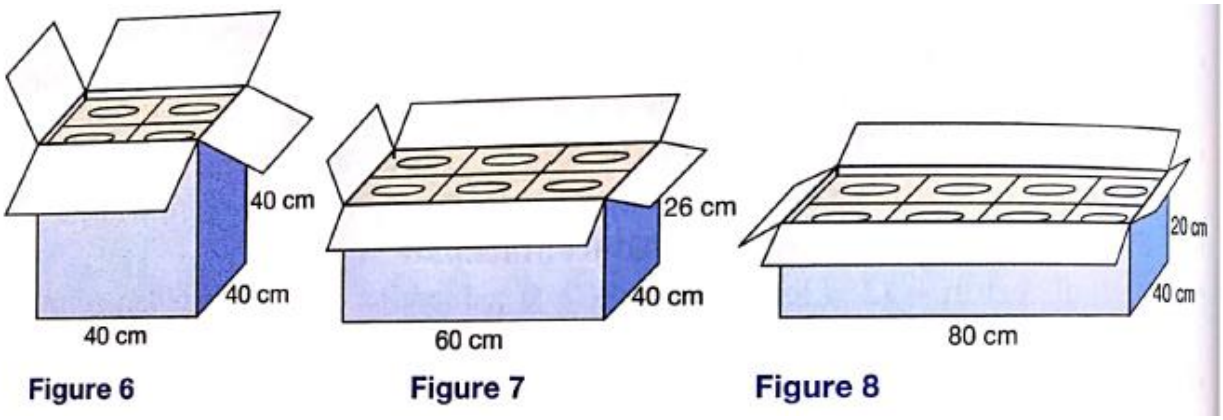

20cm

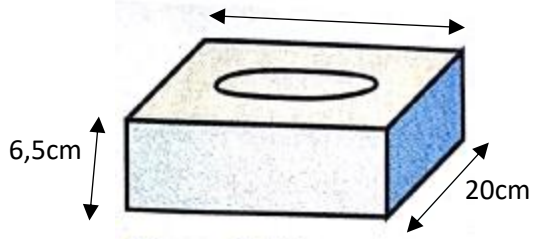

Figure 9 Tissue box

2.1 How many tissue boxes can fit into each container?

	Along the length	**Along the breadth**	**Stacked on top**	**Total no. of tissues**
Figure 6				
Figure 7				
Figure 8				

2.2 How far from the top of each container is the upper layer of the tissue boxes?

Figure6: _____Figure 7: _____ Figure 8:_____

_____ _____ _____

2.3 Which container do you think is the best packaging shape for 24 tissue boxes? Why?

_____

_____

_____

2.4 With calculation determine which container will cost a lot to make in terms of material.

_____

_____

_____

_____

_____

_____

_____

_____

QUESTION 3

You are working for a company that designs boxes, bottles and other containers. You are currently working on a design for a milk carton as shown below.

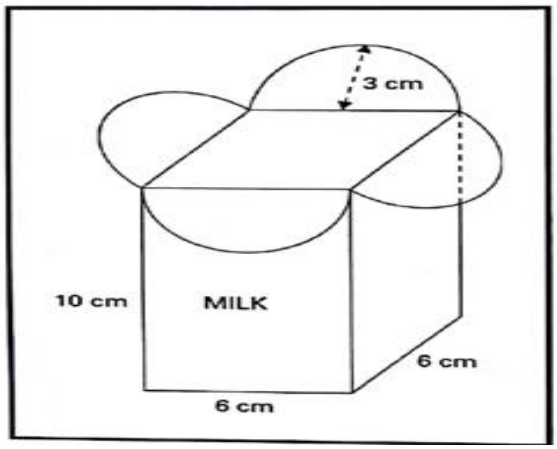

The base is a square, 6cm by 6cm. The height of the carton is 10cm. Four overlapping semi-circular flaps seal the top of the carton, each with a radius of 3cm.Area of circle: A $=\pi r^2$

3.1 Find the volume of each carton I cm^3.

_____

3.2 Determine how much cardboard (the area) is needed to make a single milk carton.

_____

3.3 How many litres of milk can each carton hold?

_____

3.4 What will it cost to fill 200 cartons with milk, if milk cost R1 200 per kilolitre? Assume that you can buy exactly as much milk is as needed (you don't have to purchase a whole kilolitre if you need 10 litres, for example)

_____

_____

_____

_____

QUESTION 4

Thabiso has to design a container holding three tennis balls. The diameter of a tennis ball is 6,5cm. The tennis ball must fit tightly into the containers. The base, lid and sides will be made of same plastic material.

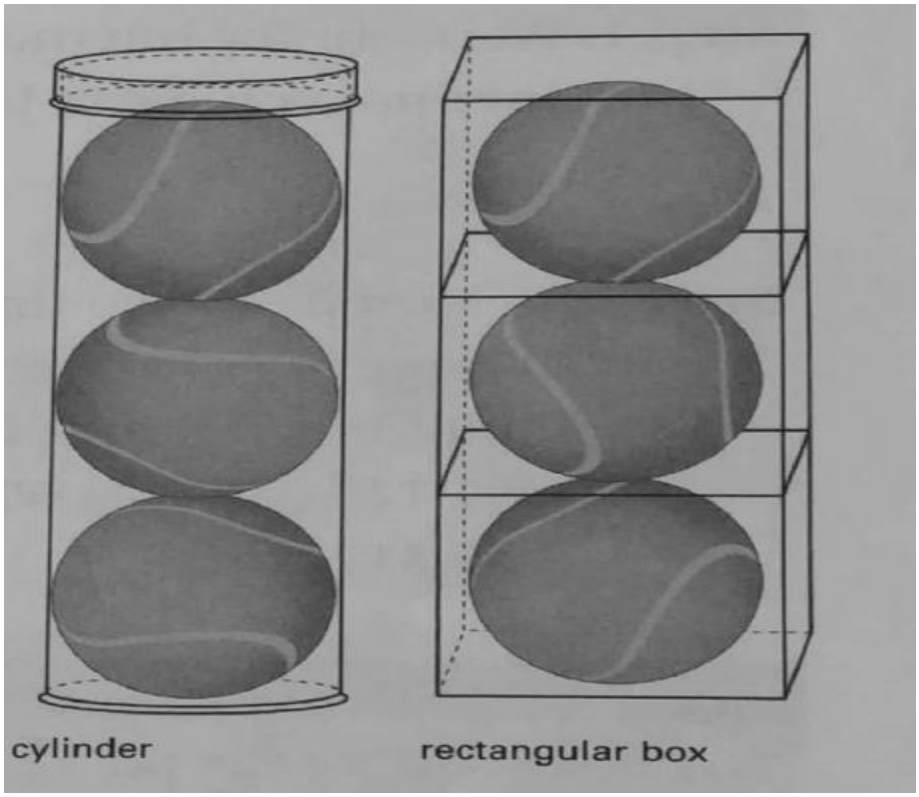

4.1 Work out how much plastic would be used to pack three tennis balls in a cylinder.

Use the formula: Surface area of a cylinder with a closed lid and base

$$= (2 \times \pi \times r^2) + (2 \times \pi \times r \times h)\ , where\ \pi = 3{,}142)$$

_____

_____

_____

_____

4.2 Work out how much plastic would be used to pack three tennis balls into a rectangular box without the plastic dividers.

Use the formula: Surface area of a lidded rectangular box

$= (2 \times area\ of\ base) + (4 \times area\ of\ rectangular\ sides)$

or

$=(2 \times diameter \times diameter) + (4 \times diameter \times (3 \times diameter))$

4.3 Use your answer in 4.1 & 4.2 above to say which type of packaging uses the least plastics (more economical).

_____

_____

_____

QUESTION 5

Fruit juices are often sold in rectangular boxes called tetrapacks. The base and the top of a one-litre fruit pack measures $6cm\ \times 9cm$, and they are 19cm high.

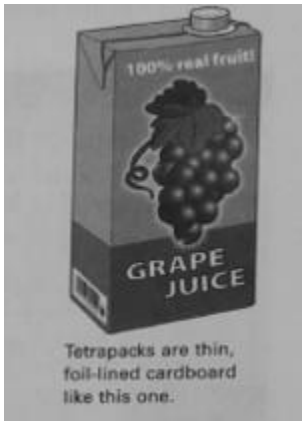

Tetrapacks are thin, foil-lined cardboard like this one.

Investigate the best dimensions for a carton that will hold two rows of five one-litre tetrapacks in a single layer. Allow a tolerance of 0,5cm per terapack. Give a reason for the dimensions you select.

_____

_____

_____

_____

ASSEMBLY DIAGRAMS USING INSTRUCTIONS

QUESTION 1

Robert buys a new TV cabinet unit that comes with the pictorial assembly instructions:

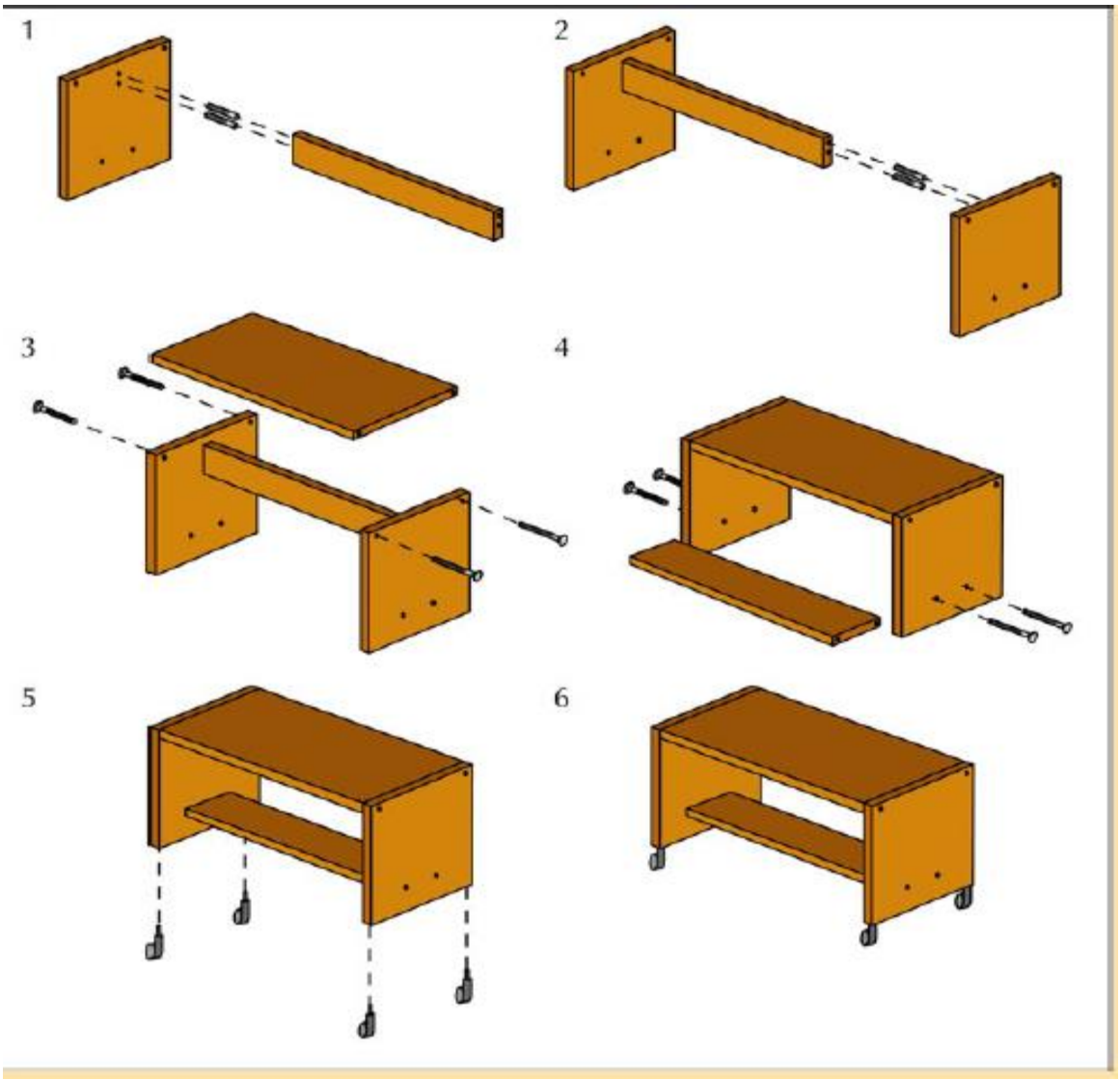

1.1 How many pieces of wood should Robert expect to find in the box that the cabinet came in?

_____

1.2 How many wheels should be I the box?

_____

1.3 If the cabinet did not come with screws, how many screws will Robert need to put the cabinet together. _____

1.4 Could the cabinet be assembled if Robert complete the steps in different order. Explain your answer.

_____

QUESTION 2

The model in Figure 3 is built by using bricks similar to those in front of it. Write assembly instructions for this model

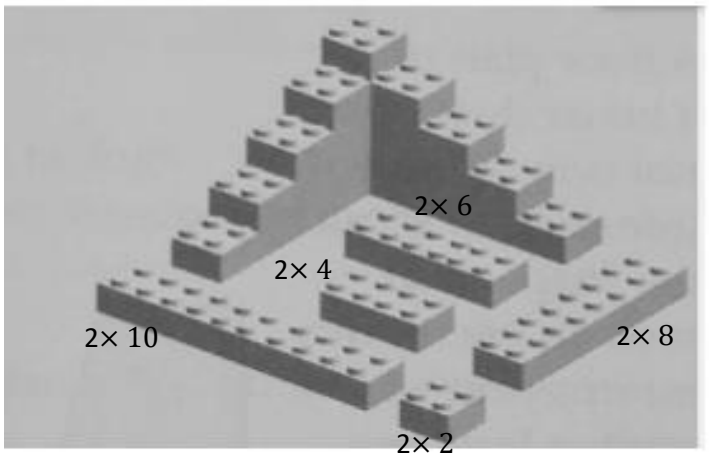

QUESTION 3

In Ms Harkers room is a bookshelf as shown below. Below the bookshelf is one of the shelves. Study these diagrams carefully before you and answer the questions. These diagrams are not drawn to scale.

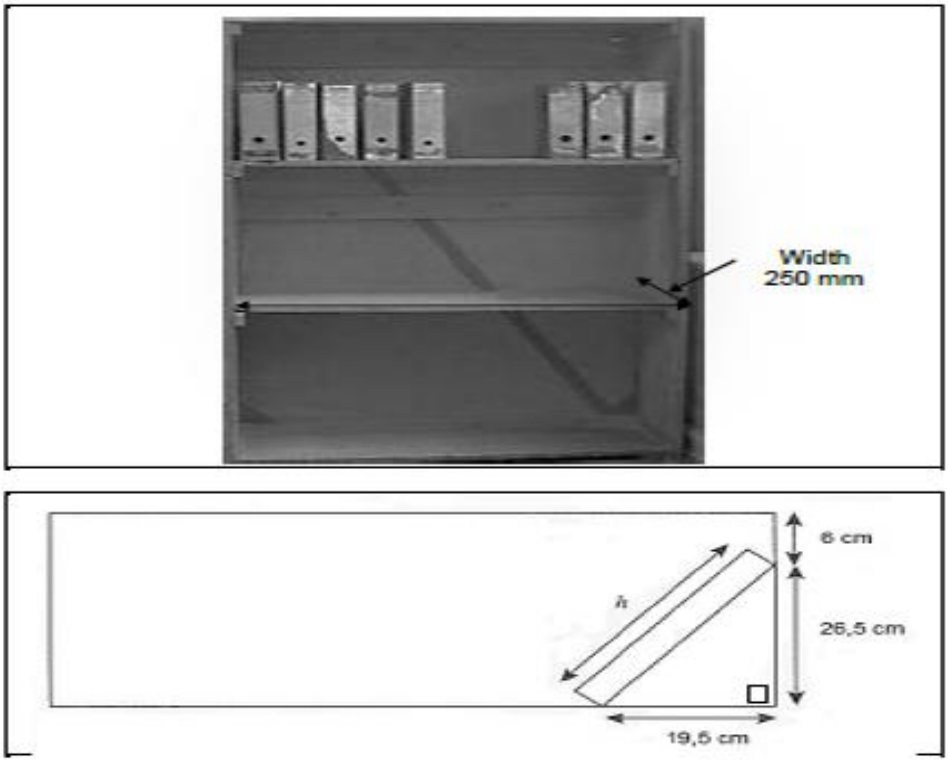

3.1 The total area of the shelves where the books are packed, is 0,45m^2 and the width of one shelf is 250mm. Calculate the length of ONE shelf in centimeters.

The following formula may be useful: Area = Length × breadth

_____

_____

_____

_____

_____

3.2 Hence calculate the number of books that can be packed on the shelf if the thickness of the book is 23mm.

_____

_____

_____

_____

QUESTION 4

Minah, a housewife, is into business of baking and selling of biscuits and cookies. To make her task easier, she decided to buy electrical biscuit and cookie maker as shown in the diagram below.

In order for her to use the biscuit and cookie maker, she has to read all instructions to assembly it. The following shows the illustrations of the different parts of the biscuit and cookie maker

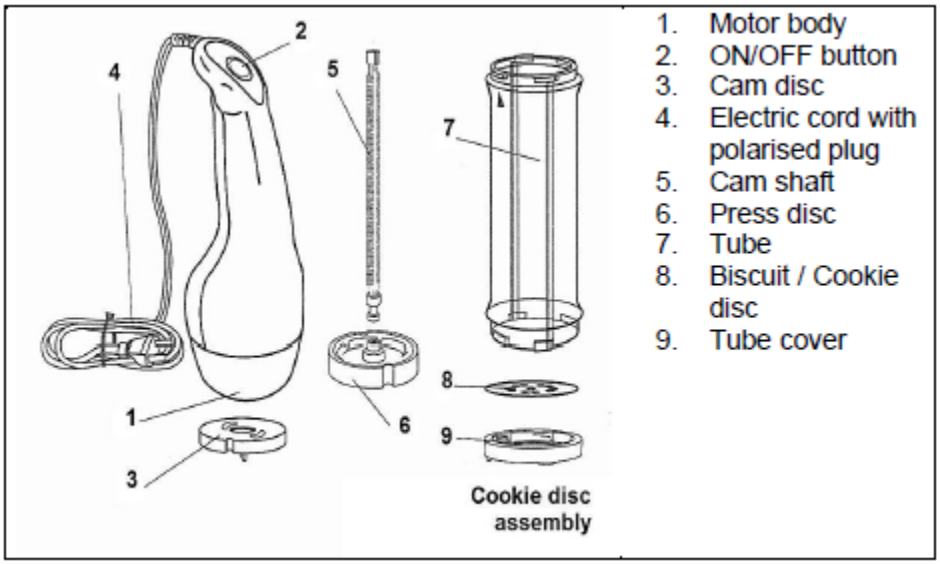

The following pictured instructions were included in the box. The pictures are not necessarily in the correct order for assembly.

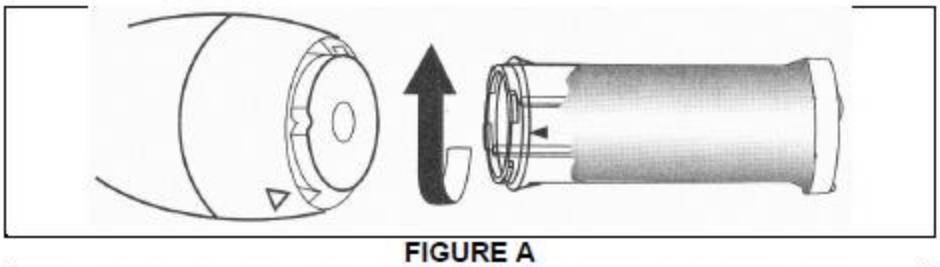

FIGURE A

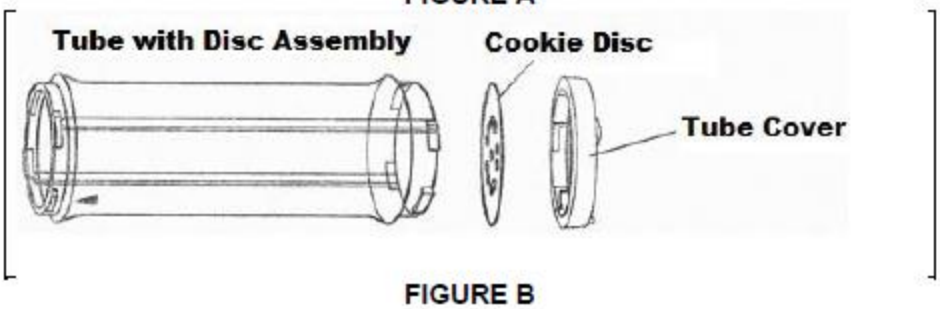

FIGURE B

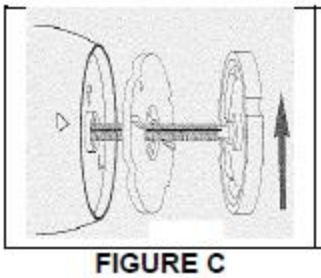

FIGURE C

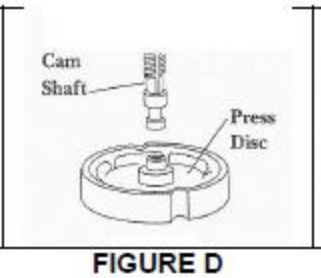

FIGURE D

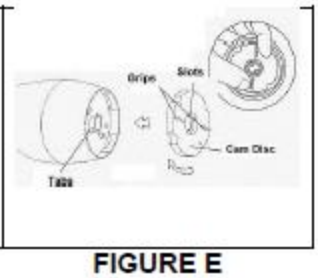

FIGURE E

4.1 Read through the chronological instructions. Choose the correct figure that best matches each of the instructions below.

1. Attach the Cam shaft to the Press Disc by inserting the stem of the shaft into the Press Disc's centre hole. Press firmly. You will hear a click as the shaft snaps in place.

   Figure _____

2. Line the Taps on the Motor Body up with the slots on the Cam Disc. Insert the Cam Disc into the Motor Body. Using the two Grips on the Cam Disc, turn slightly clockwise until the Disc clicks into position.
   Figure_____

3. Fit the shaft all the way inside the unit, until the outside contours of the 2 Discs line up.
   Figure _____

4. Select a disc and place it inside the Tube Cover, turning clockwise until locked.
   Figure _____

5. With a spoon or spatula, load the freshly prepared dough into the top of the Tube.

   Figure _____

6. Look inside the Tube to see the ridges extending from top to bottom. These ridges align with the outside contours of the 2 Discs. Grasp Tube firmly, join the Body with the filled Tube and turn clockwise until the Tube locks into position.

   Figure _____

4.2 The introduction to the instructions is that you always have to unplug the biscuit and cookie maker from the outlet before assembly or disassembly of parts. Why do you think this is an important? instruction?

_____

_____

4.4 The following diagram shows the tube that needs to be filled with a prepared dough. (diagram not drawn to scale)

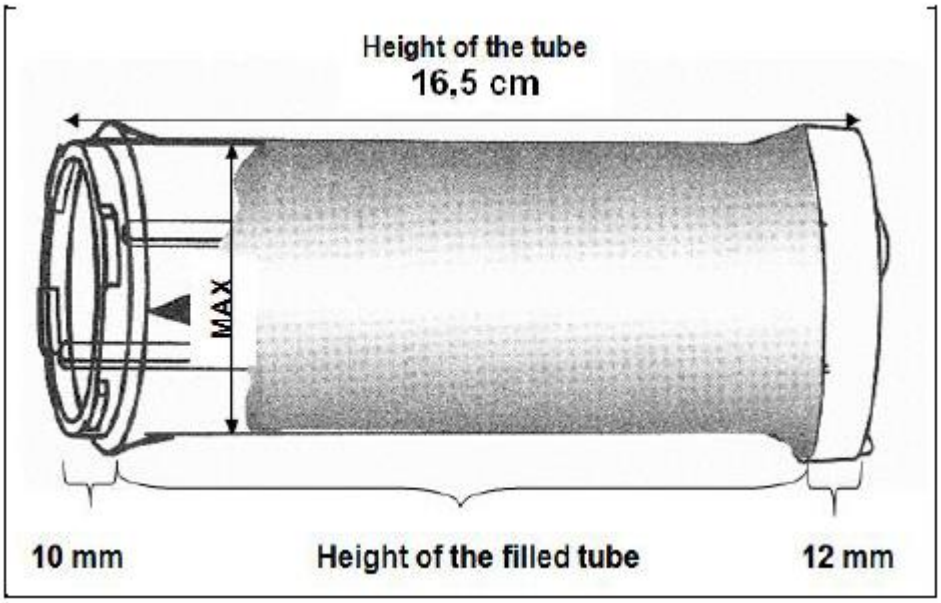

Determine the height of the filled tube.

_____

_____

_____