Grade 10 **Physical Sciences** **October 2020**

Topic: Electricity and Magnetism **Marks: 55**

Revision worksheet 6

Instruction to learners: Answer the following questions. You may refer to pages 180 to 212.

QUESTION 1

A polythene rod is rubbed with a cloth and the rod becomes charged negatively. The rod is then brought near an electroscope without touching it. The gold leaf on the electroscope is deflected. The polythene rod then touches a polystyrene ball hanging from a string.

1.1 Explain why the rod gets negatively charged. (2)

1.2 On the answer sheet: label the gold leaf and show the general placement of the positive and negative charges while the rod is near the cap of the electroscope. (3)

1.3 Explain why the gold leaf deflects. (1)

1.4 Draw electric field lines around the polystyrene ball after being touched by the polythene rod. (3)

1.5 Explain how dust might be removed using the principles studied in electrostatics. This can be in an industrial of domestic environment. (2)

[11]

QUESTION 2

A pupil decides to investigate the relationship between the length of a piece of nichrome wire and the total resistance of the wire. The learner decides to use an ammeter, voltmeter, 3 cell battery and switch to perform the experiment with different length of wire. She decides to keep the temperature, thickness and type of wire constant throughout the experiment.

The pupil completed the following table of results:

Length of wire (cm)	Potential difference (V)	Current (A)	Resistance (Ω)
10	30	1,67	18
20	60	1,62	37
30	89	1,68	53
40	120		72
50	151	1,68	90

2.1 Draw a circuit diagram that would describe the experimental setup. (4)

2.2 List three control variables for this experiment. (3)

2.3 Identify the independent variable. (1)

2.4 Determine the missing current reading to two decimal places. (1)

2.5 Draw a graph of these results on the answer sheet. Label the axes and choose a suitable scale, provide a descriptive heading and draw a line of best fit. (8)

2.6 Explain the meaning of this gradient. (2)

[19]

QUESTION 3

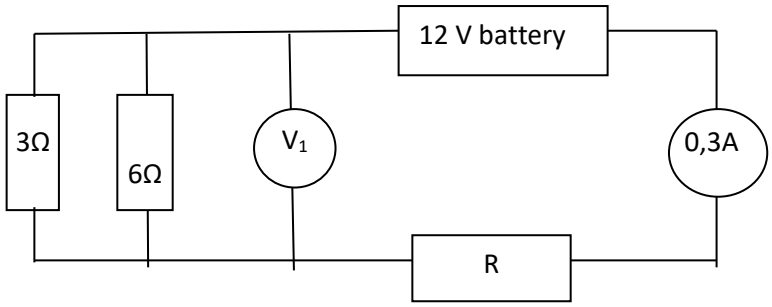

The circuit on the left shows a 3Ω and 6Ω resistor in parallel with each other and in series with an unknown resistor. The battery has an emf of 12V and the reading on the ammeter is 0,3A.

3.1 Calculate the charge that flows through the ammeter in 2 minutes. (3)

3.2 Determine the effective resistance of the parallel combination. (3)

3.3 Determine the reading on V_1. (3)

3.4 How much work is done by the battery in 2 minutes? (3)

3.5 Describe the transfer of energy in the circuit. (2)

3.6 How much current flows through the 3Ω resistor? (2)

3.7 Determine the value of R. (4)

[20]